INSTALLATION MANUAL - KD72

HOSPITALITY DIVISION

eurotech

LUXURY SHOWER DOORS

TRADITIONAL

TWINGLIDE FRAMELESS DUAL SLIDING SHOWER DOOR

Eurotech Showers
Hospitality Division
23532 Commerce Center Dr.,
Building B
Laguna Hills, CA 92653
949-716-4099
eurotechshowershospitality.com

SUPER EASY INSTALL

HOSPITALITY DIVISION
eurotech
LUXURY SHOWER DOORS

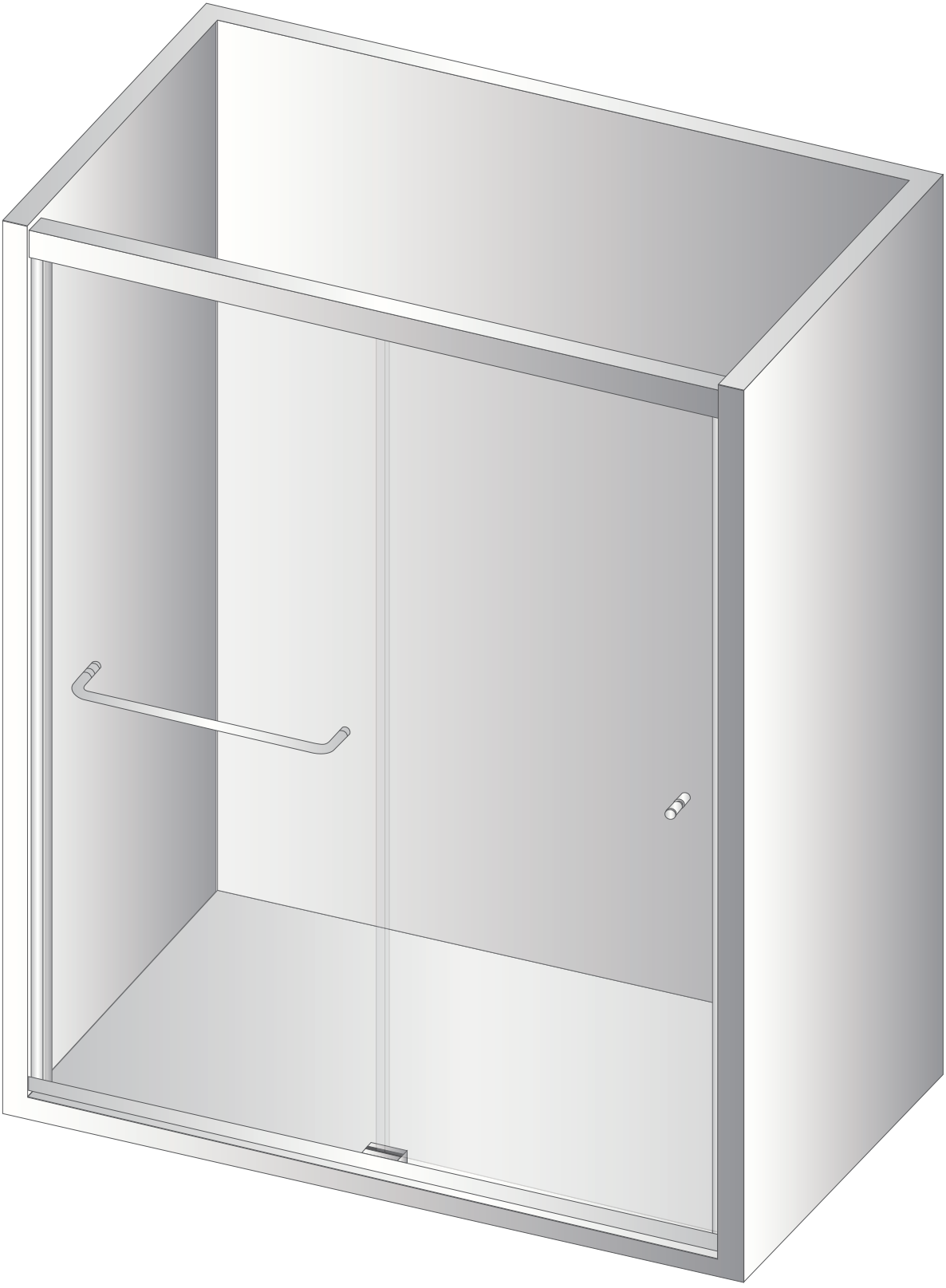

HARDWARE FITS UP TO 72" WIDE OPENING

Tools Required

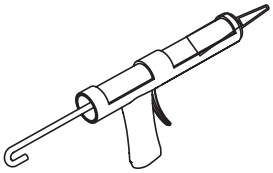

Silicone

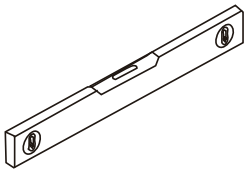

Level

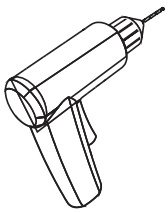

Drill

Masonry Bit

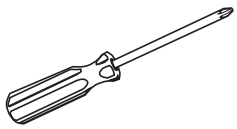

Screwdriver
(Phillips)

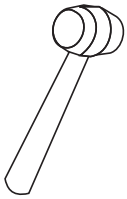

Mallot

Pencil

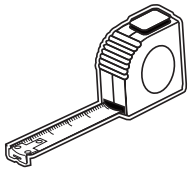

Tape Measurer

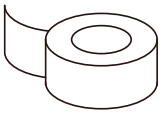

Painters
Tape

Allen Wrench
(included)

This product is heavy and may require two people to install.

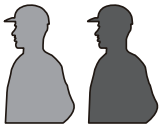

Congratulations on your purchase of your Eurotech Shower door, making your shower dreams come to life.

◆ Assembly Drawing

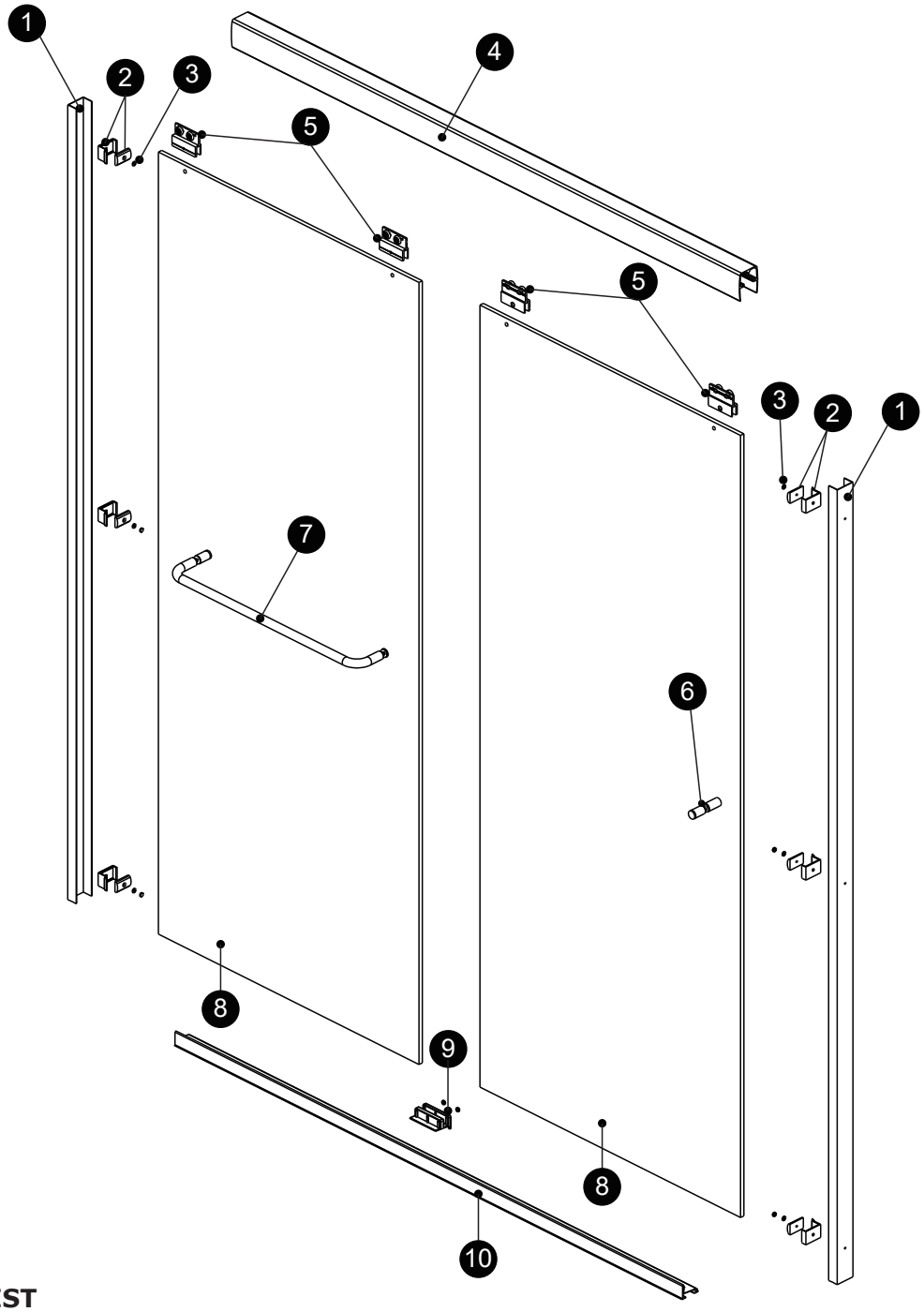

PACKING LIST

PART #	DESCRIPTION	Q'TY	PART #	DESCRIPTION	Q'TY
1	Wall Jamb	2pcs	6	Knob	1set
2	Glass Guides x 6	6sets	7	Towel Bar	1set
	Bumper Blocks x 6		8	Door Panel	2pcs
3	Washers	6pcs	9	Bottom Guide	1pc
4	Track	1pc	10	Bottom Sill	1pc
5	Roller Bracket	4sets			

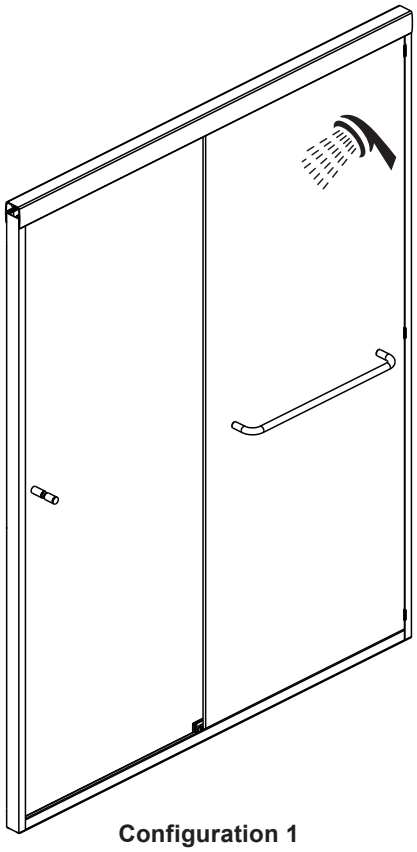

Configuration 1

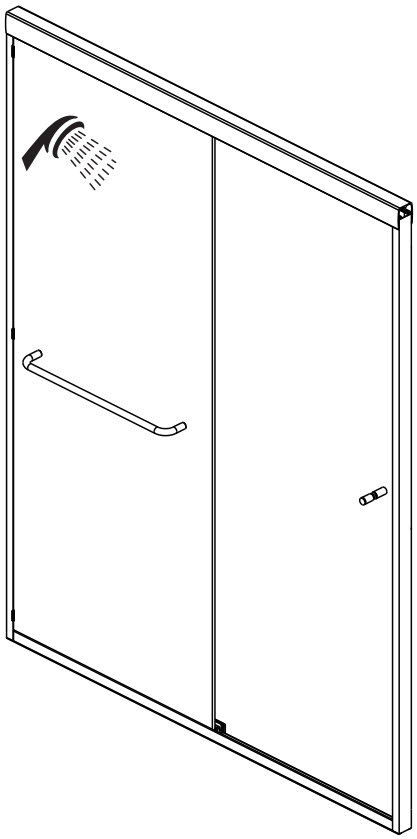

Configuration 2

(This Configurations is illustrated in this Manual)

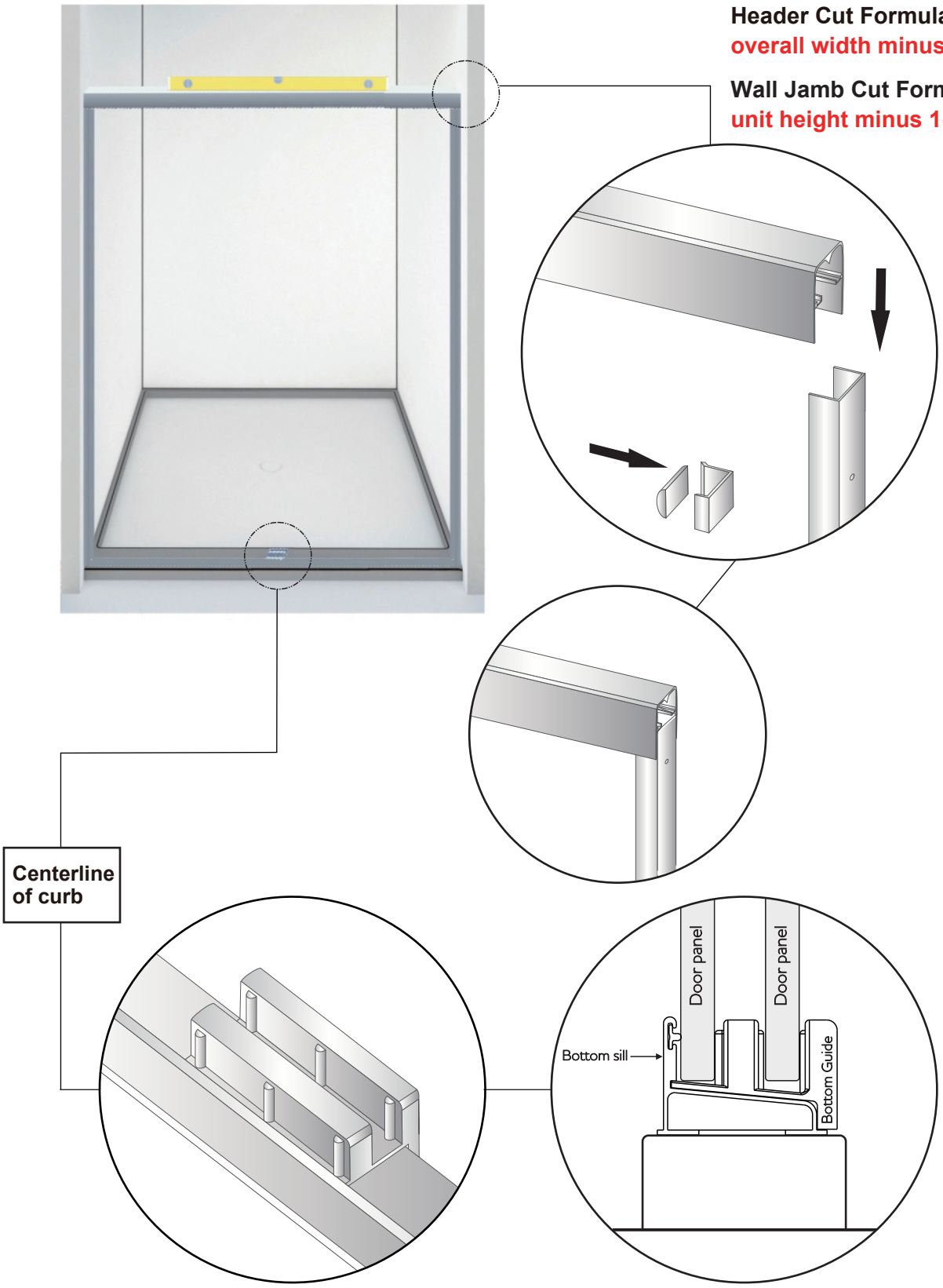
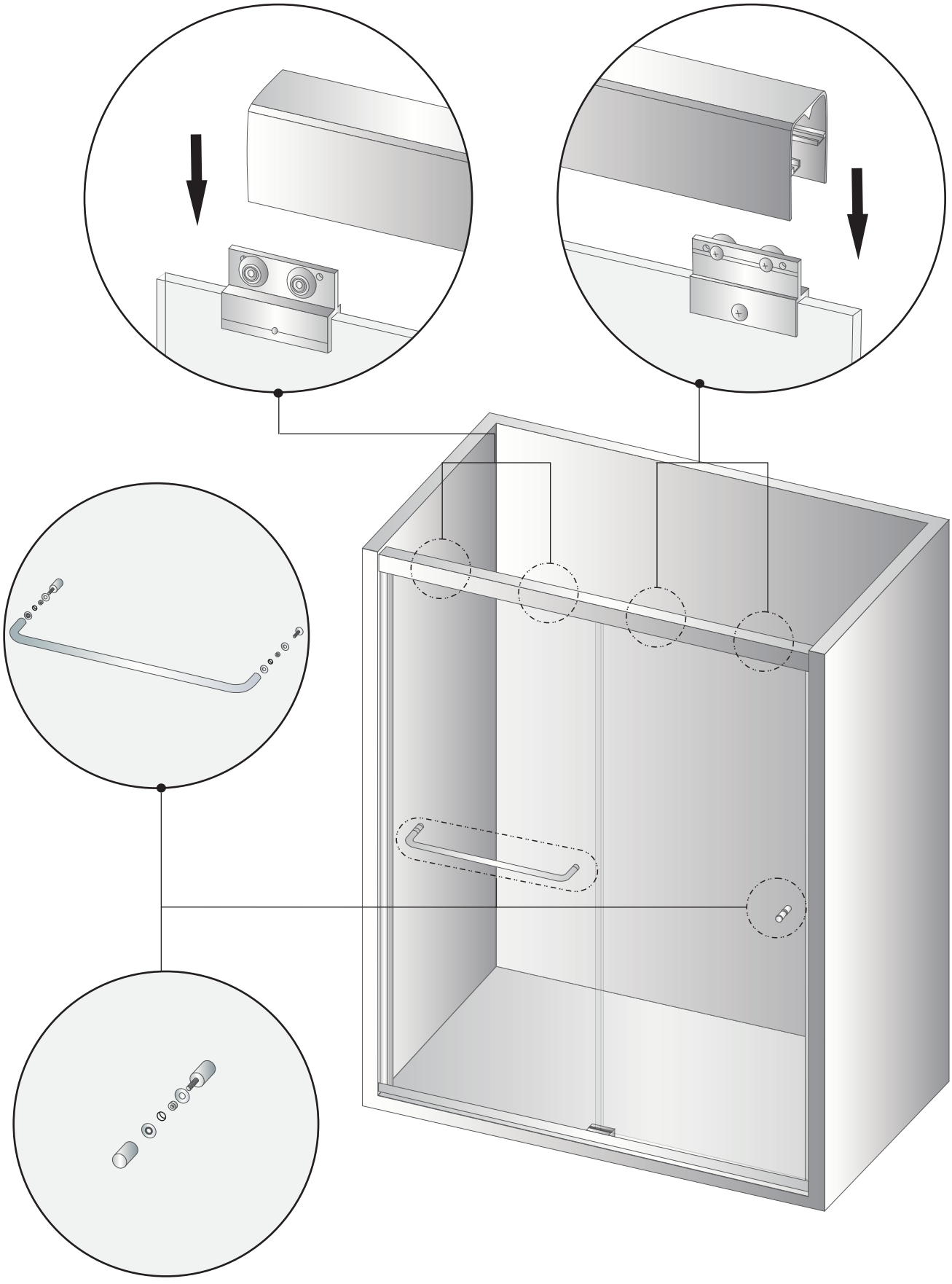
Bottom Sill Cut Formula: overall width minus 1/8"